A 0.8V TO 5.5V, 1.3µA, 20kHz RAIL-TO-RAIL SINGLE OP AMP

FEATURES

Single 0.8V to 5.5V Operation
Supply current: 1.3µA (typ)
Input Bias Current: 2pA (typ)
Low TCV_{OS}: 9µV/°C (typ)
A_{VOL} Driving 100kΩ Load: 90dB (min)
Gain-Bandwidth Product: 20kHz
Unity Gain Stable
Rail-to-rail Input and Output
No Output Phase Reversal
5-pin SC70 or 5-Pin SOT23 Package

APPLICATIONS

Battery/Solar-Powered Instrumentation
Portable Gas Monitors
Low-voltage Signal Processing
Micropower Active Filters
Wireless Remote Sensors
Battery-powered Industrial Sensors
Active RFID Readers
Powerline or Battery Current Sensing
Handheld/Portable POS Terminals

DESCRIPTION

The TS1005 is a 1.3µA supply current, precision CMOS operational amplifier designed to operate over a supply voltage range from 0.8V to 5.5V with a GBWP of 20kHz. Fully specified at 1.8V, the TS1005 is optimized for ultra-long-life battery-powered applications. The TS1005 is the fifth operational amplifier in the "NanoWatt Analog™" high-performance analog integrated circuits portfolio. The TS1005 exhibits a typical input bias current of 2pA, and has rail-to-rail input and output stages.

The TS1005's combined features make it an excellent choice in applications where very low supply current and low operating supply voltage translate into very long equipment operating time. Applications include: micropower active filters, wireless remote sensors, battery and powerline current sensors, portable gas monitors, and handheld/portable POS terminals.

The TS1005 is fully specified over the industrial temperature range (−40°C to +85°C) and is available in a PCB-space saving 5-lead SC70 and SOT23 packaging.

TYPICAL APPLICATION CIRCUIT

A MicroWatt 2-Pole Sallen Key Low Pass Filter

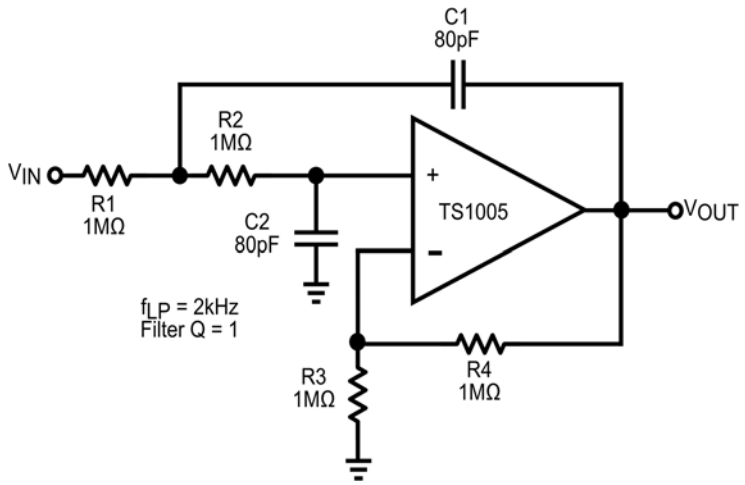

Supply Current Distribution

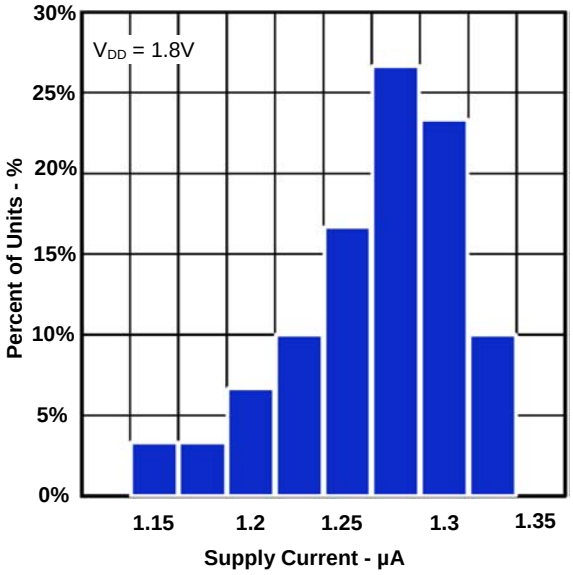

ABSOLUTE MAXIMUM RATINGS

Total Supply Voltage (V_{DD} to V_{SS}) ..... +6.0V
Voltage Inputs (IN+, IN-) ..... (V_{SS} - 0.3V) to (V_{DD} + 0.3V)
Differential Input Voltage ..... ±6.0 V
Input Current (IN+, IN-) ..... 20 mA
Output Short-Circuit Duration to GND ..... Indefinite
Continuous Power Dissipation (T_A = +70°C)
5-Pin SC70 (Derate 3.87mW/°C above +70°C) .... 310 mW
5-Pin SOT23(Derate 3.87mW/°C above +70°C) ... 312 mW

Operating Temperature Range ..... -40°C to +85°C
Junction Temperature ..... +150°C
Storage Temperature Range ..... -65°C to +150°C
Lead Temperature (soldering, 10s) ..... +300°

Electrical and thermal stresses beyond those listed under “Absolute Maximum Ratings” may cause permanent damage to the device. These are stress ratings only and functional operation of the device at these or any other condition beyond those indicated in the operational sections of the specifications is not implied. Exposure to any absolute maximum rating conditions for extended periods may affect device reliability and lifetime.

PACKAGE/ORDERING INFORMATION

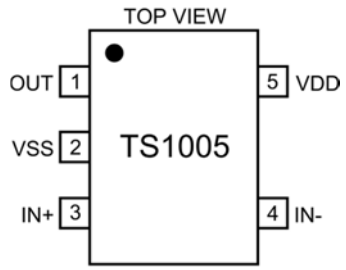

SC70-5
J5 Package

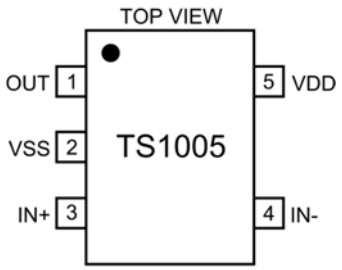

SOT23-5
G5 Package

TAPE & REEL ORDER NUMBER	PART MARKING	PACKAGE QUANTITY	TAPE & REEL ORDER NUMBER	PART MARKING	PACKAGE QUANTITY
TS1005IJ5	TAJ	---	TS1005IG5	TAEB	---
TS1005IJ5T		3000	TS1005IG5T		3000

Lead-free Program: Silicon Labs supplies only lead-free packaging.

Consult Silicon Labs for products specified with wider operating temperature ranges.

ELECTRICAL CHARACTERISTICS

V_{DD} = +1.8V, V_{SS} = 0V, V_{INCM} = V_{SS}; R_L = 100kΩ to (V_{DD}-V_{SS})/2; T_A = -40°C to +85°C, unless otherwise noted. Typical values are at T_A = +25°C. See Note 1

Parameters	Symbol	Conditions		Min	Typ	Max	Units
Supply Voltage Range	V_{DD}-V_{SS}			0.8		5.5	V
Supply Current	I_{SY}	R_L = Open circuit	T_A = 25°C		1.3	1.6	µA
			-40°C ≤ T_A ≤ 85°C			1.8	
Input Offset Voltage	V_{OS}	V_{IN} = V_{SS} or V_{DD}	T_A = 25°C		0.8	3	mV
			-40°C ≤ T_A ≤ 85°C			5	
Input Offset Voltage Drift	TCV_{OS}				9		µV/°C
Input Bias Current	I_{IN+}, I_{IN-}	V_{IN+}, V_{IN-} = (V_{DD} - V_{SS})/2	T_A = 25°C		2		pA
			-40°C ≤ T_A ≤ 85°C			100	
Input Offset Current	I_{OS}	Specified as I_{IN+} - I_{IN-} V_{IN+}, V_{IN-} = (V_{DD} - V_{SS})/2	T_A = 25°C		2		pA
			-40°C ≤ T_A ≤ 85°C			50	
Input Voltage Range	IVR	Guaranteed by Input Offset Voltage Test		V_{SS}		V_{DD}	V
Common-Mode Rejection Ratio	CMRR	Vdd = 5.5V, 0V ≤ $V_{IN(CM)}$ ≤ 5.0V	T_A = 25°C	70	90		dB
			-40°C ≤ T_A ≤ 85°C	68			
Power Supply Rejection Ratio	PSRR	0.8V ≤ (V_{DD} - V_{SS}) ≤ 5.5V	T_A = 25°C	70	90		dB
			-40°C ≤ T_A ≤ 85°C	67			
Output Voltage High	V_{OH}	Specified as V_{DD} - V_{OUT}, R_L = 100kΩ to V_{SS}	T_A = 25°C		3.7		mV
			-40°C ≤ T_A ≤ 85°C			6	
		Specified as V_{DD} - V_{OUT}, R_L = 10kΩ to V_{SS}	T_A = 25°C		30		
			-40°C ≤ T_A ≤ 85°C			60	
Output Voltage Low	V_{OL}	Specified as V_{OUT} - V_{SS}, R_L = 100kΩ to V_{DD}	T_A = 25°C		1.5		mV
			-40°C ≤ T_A ≤ 85°C			6	
		Specified as V_{OUT} - V_{SS}, R_L = 10kΩ to V_{DD}	T_A = 25°C		15		
			-40°C ≤ T_A ≤ 85°C			30	
Short-circuit Current	I_{SC+}	V_{OUT} = V_{SS}	T_A = 25°C		4		mA
			-40°C ≤ T_A ≤ 85°C	2			
	I_{SC-}	V_{OUT} = V_{DD}	T_A = 25°C		15		
			-40°C ≤ T_A ≤ 85°C	7			
Open-loop Voltage Gain	A_{VOL}	V_{SS}+50mV ≤ V_{OUT} ≤ V_{DD}-50mV	T_A = 25°C	91	110		dB
			-40°C ≤ T_A ≤ 85°C	84			
Gain-Bandwidth Product	GBWP	R_L = 100kΩ to V_{SS}, C_L = 20pF			20		kHz
Phase Margin	φ_M	Unity-gain Crossover, R_L = 100kΩ to V_{SS}, C_L = 20pF			70		degrees
Slew Rate	SR	R_L = 100kΩ to V_{SS}, A_{VCL} = +1V/V			7.5		V/ms
Full-power Bandwidth	FPBW	FPBW = SR/(π • $V_{OUT,PP}$); $V_{OUT,PP}$ = 0.7V_{PP}			3400		Hz
Input Voltage Noise Density	e_n	f = 1kHz			0.6		µV/√Hz
Input Current Noise Density	i_n	f = 1kHz			10		pA/√Hz

Note 1: All specifications are 100% tested at T_A = +25°C. Specification limits over temperature (T_A = T_{MIN} to T_{MAX}) are guaranteed by device characterization, not production tested.

TYPICAL PERFORMANCE CHARACTERISTICS

Supply Current vs Supply Voltage

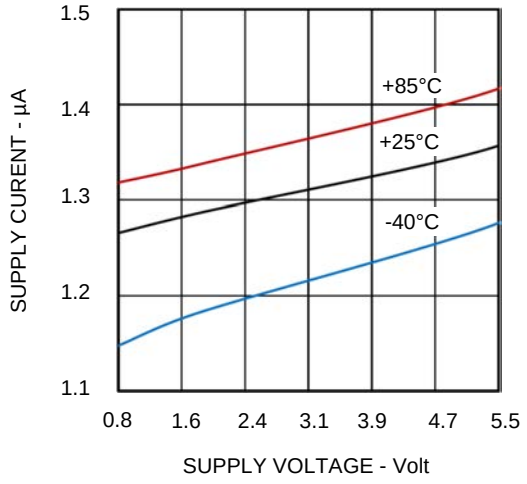

Supply Current vs Input Common-Mode Voltage

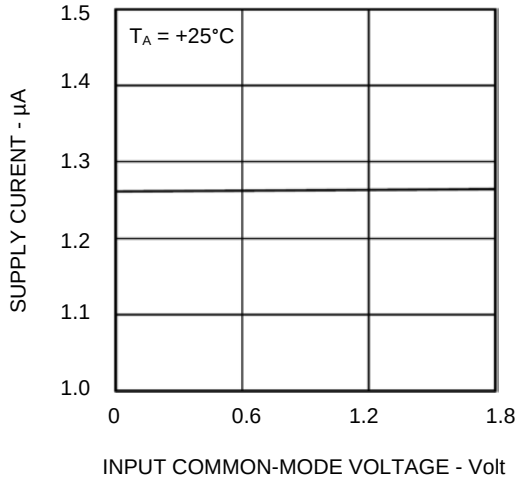

Supply Current vs Input Common-Mode Voltage

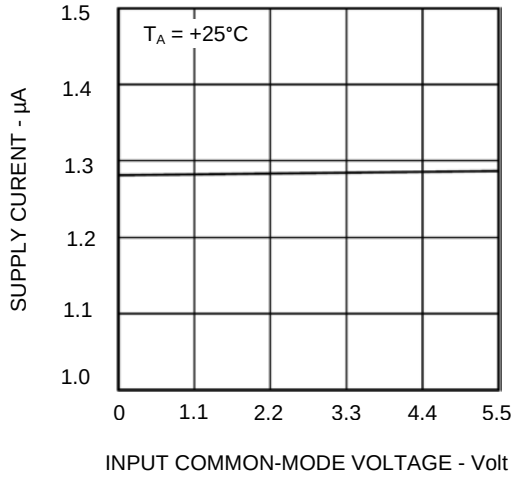

Input Offset Voltage vs Supply Voltage

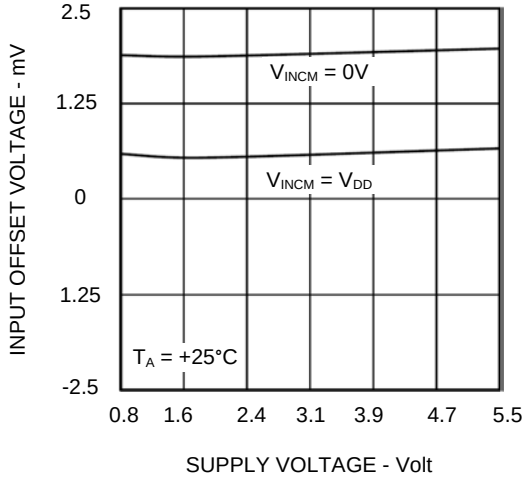

Input Offset Voltage vs Input Common-Mode Voltage

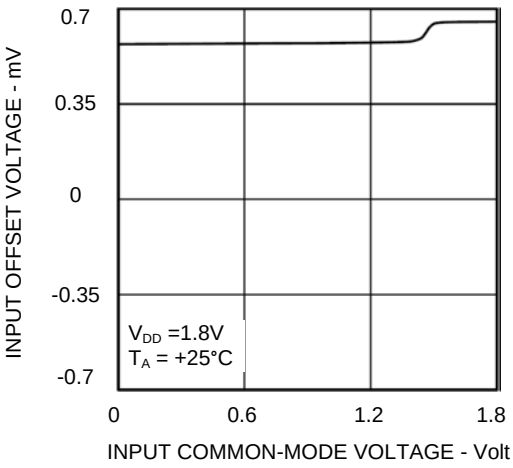

Input Offset Voltage vs Input Common-Mode Voltage

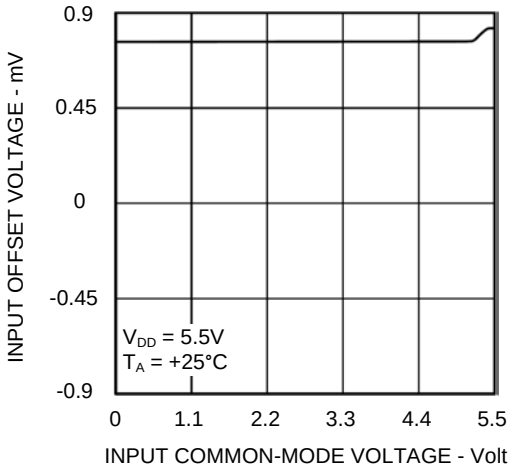

TYPICAL PERFORMANCE CHARACTERISTICS

Input Bias Current (I_{IN+}, I_{IN-}) vs Input Common-Mode Voltage

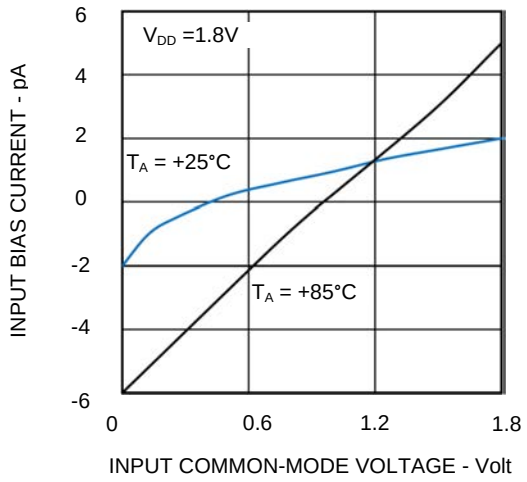

Input Bias Current (I_{IN+}, I_{IN-}) vs Input Common-Mode Voltage

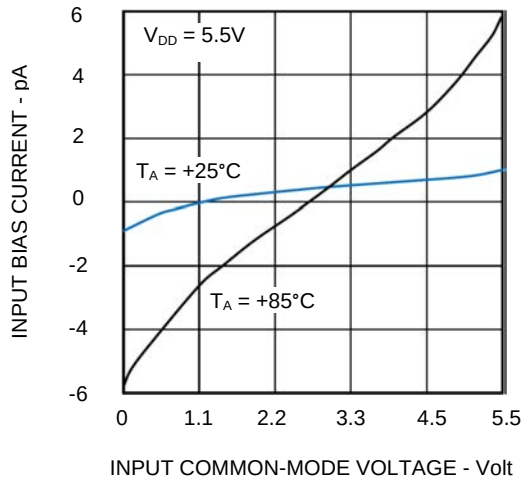

Output Voltage High (V_{OH}) vs Temperature, R_{LOAD} =100kΩ

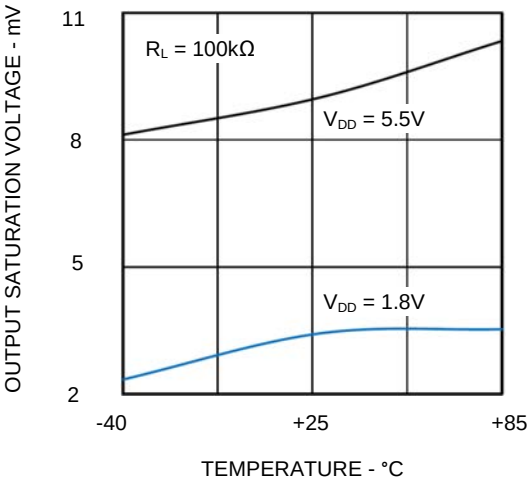

Output Voltage Low (V_{OL}) vs Temperature, R_{LOAD} =100kΩ

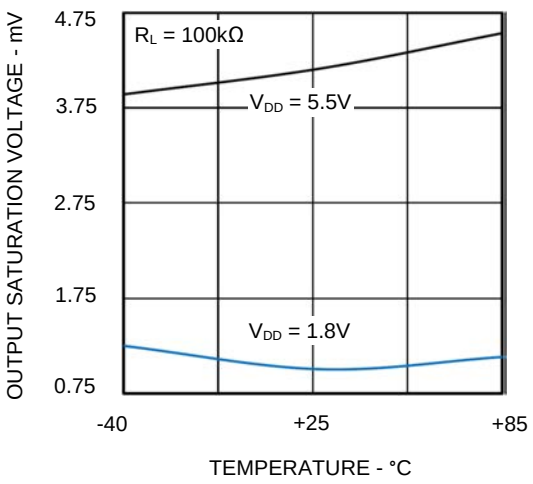

Output Voltage High (V_{OH}) vs Temperature, R_{LOAD} =10kΩ

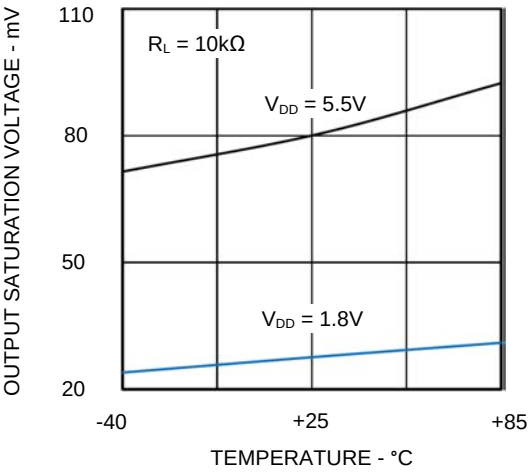

Output Voltage Low (V_{OL}) vs Temperature, R_{LOAD} =10kΩ

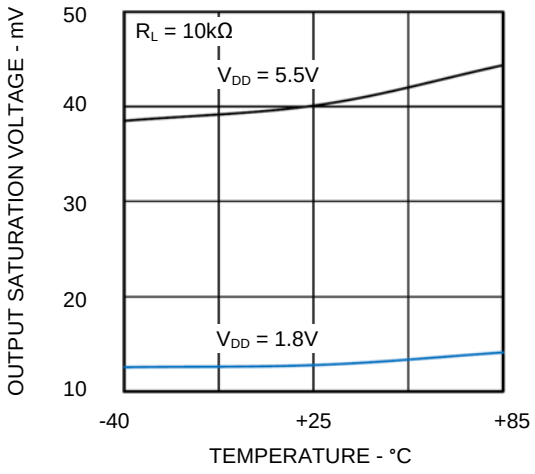

TYPICAL PERFORMANCE CHARACTERISTICS

Output Short Circuit Current, I_{SC+} vs Temperature

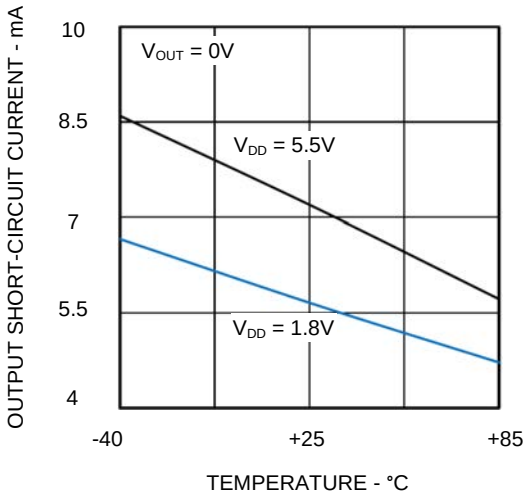

Output Short Circuit Current, I_{SC-} vs Temperature

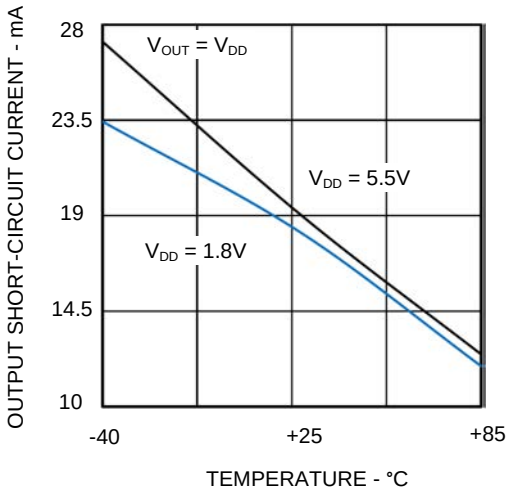

Gain and Phase vs. Frequency

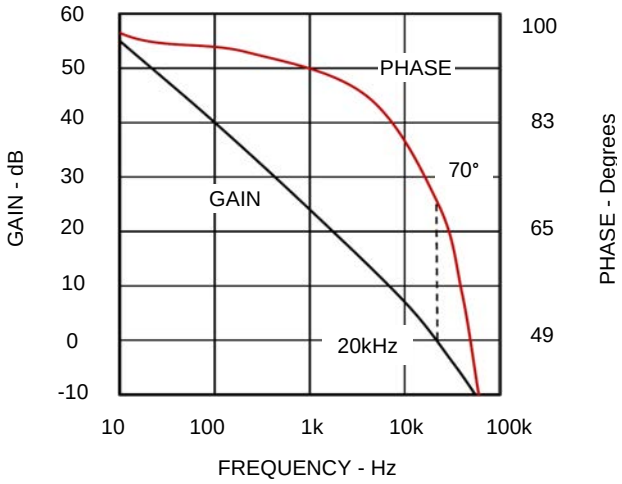

0.1Hz to 10Hz Output Voltage Noise

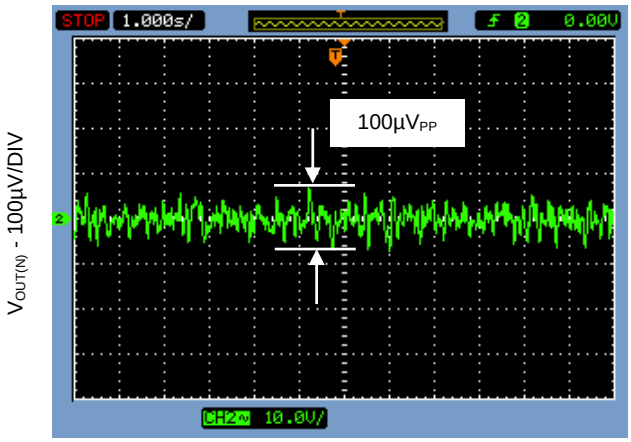

1 Second/DIV

Small-Signal Transient Response
V_{DD} = 5.5V, V_{SS} = GND, R_{LOAD} = 100kΩ, C_{LOAD} = 15pF

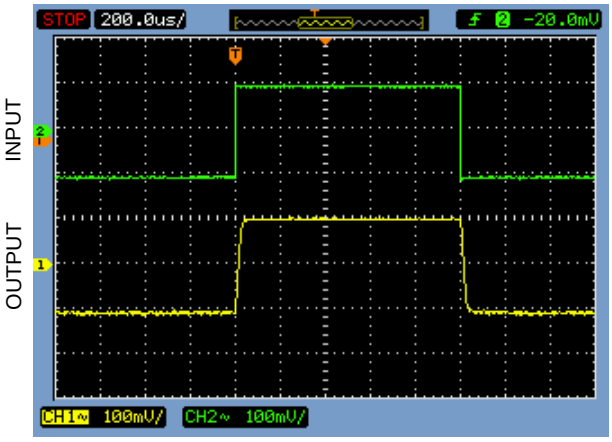

200µs/DIV

Large-Signal Transient Response
V_{DD} = 5.5V, V_{SS} = GND, R_{LOAD} = 100kΩ, C_{LOAD} = 15pF

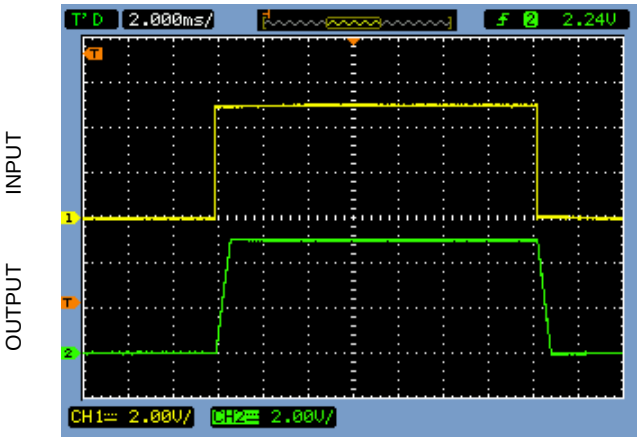

2ms/DIV

PIN FUNCTIONS

Pin	Label	Function
1	OUT	Amplifier Output.
2	V_{SS}	Negative Supply or Analog GND. If applying a negative voltage to this pin, connect a 0.1µF capacitor from this pin to analog GND.
3	+IN	Amplifier Non-inverting Input.
4	-IN	Amplifier Inverting Input.
5	V_{DD}	Positive Supply Connection. Connect a 0.1µF bypass capacitor from this pin to analog GND.

THEORY OF OPERATION

The TS1005 is fully functional for an input signal from the negative supply (V_{SS} or GND) to the positive supply (V_{DD}). The input stage consists of two differential amplifiers, a p-channel CMOS stage and an n-channel CMOS stage that are active over different ranges of the input common mode voltage. The p-channel input pair is active for input common mode voltages, V_{INCM}, between the negative supply to approximately 0.4V below the positive supply. As the common-mode input voltage moves closer towards V_{DD}, an internal current mirror activates the n-channel input pair differential pair. The p-channel input pair becomes inactive for the balance of the input common mode voltage range up to the positive supply. Because both input stages have their own offset voltage (V_{OS}) characteristic, the offset voltage of the TS1005 is a function of the applied input common-mode voltage, V_{INCM}. The V_{OS} has a crossover point at ~0.4V from V_{DD} (Refer to the V_{OS} vs. V_{CM} curve in the Typical Operating Characteristics section). Caution should be taken in applications where the input signal amplitude is comparable to the TS1005's V_{OS} value and/or the design requires high accuracy. In these situations, it is necessary for the input signal to avoid the crossover point. In addition, amplifier parameters such as PSRR and CMRR which involve the input offset voltage will also be affected by changes in the input common-mode voltage across the differential pair transition region.

The second stage is a folded-cascode transistor arrangement that converts the input stage differential signals into a single-ended output. A complementary drive generator supplies current to the output transistors that swing rail to rail.

The TS1005 output stages voltage swings within 3.5mV from the rails at 1.8V supply when driving an output load of 100kΩ - which provides the maximum possible dynamic range at the output. This is particularly important when operating on low supply voltages. When driving a stiffer 10kΩ load, the TS1005 swings within 30mV of V_{DD} and within 13mV of V_{SS} (or GND).

APPLICATIONS INFORMATION

Portable Gas Detection Sensor Amplifier

Gas sensors are used in many different industrial and medical applications. Gas sensors generate a current that is proportional to the percentage of a particular gas concentration sensed in an air sample. This output current flows through a load resistor and the resultant voltage drop is amplified. Depending on the sensed gas and sensitivity of the sensor, the output current can be in the range of tens of microamperes to a few milliamperes. Gas sensor datasheets often specify a recommended load resistor value or a range of load resistors from which to choose.

There are two main applications for oxygen sensors – applications which sense oxygen when it is abundantly present (that is, in air or near an oxygen tank) and those which detect traces of oxygen in parts-per-million concentration. In medical applications, oxygen sensors are used when air quality or oxygen delivered to a patient needs to be monitored. In fresh air, the concentration of oxygen is 20.9% and air samples containing less than 18% oxygen are considered dangerous. In industrial

applications, oxygen sensors are used to detect the absence of oxygen; for example, vacuum-packaging of food products is one example.

The circuit in Figure 1 illustrates a typical implementation used to amplify the output of an oxygen detector. The TS1005 makes an excellent choice for this application as it only draws 1.3µA of supply current and operates on supply voltages

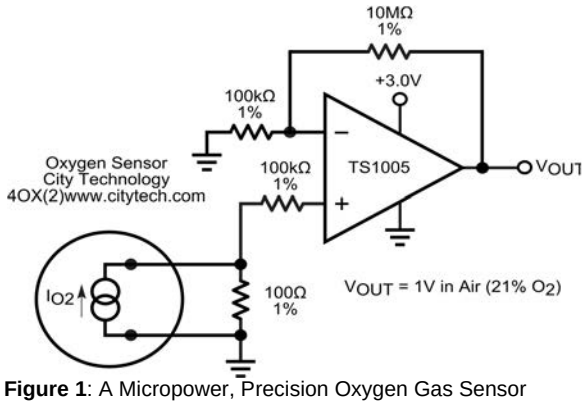

Figure 1: A Micropower, Precision Oxygen Gas Sensor Amplifier.

down to 0.8V. With the components shown in the figure, the circuit consumes less than 1.4µA of supply current ensuring that small form-factor single- or button-cell batteries (exhibiting low mAh charge ratings) could last beyond the operating life of the oxygen sensor. The precision specifications of the TS1005, such as its low offset voltage, low TCV_{OS}, low input bias current, high CMRR, and high PSRR are other factors which make the TS1005 an excellent choice for this application. Since oxygen sensors typically exhibit an operating life of one to two years, an oxygen sensor amplifier built around a TS1005 can operate from a conventionally-available single 1.5-V alkaline AA battery for over 145 years! At such low power consumption from a single cell, the oxygen sensor could be replaced over 75 times before the battery requires replacing!

MicroWatt, Buffered Single-pole Low-Pass Filters

When receiving low-level signals, limiting the bandwidth of the incoming signals into the system is

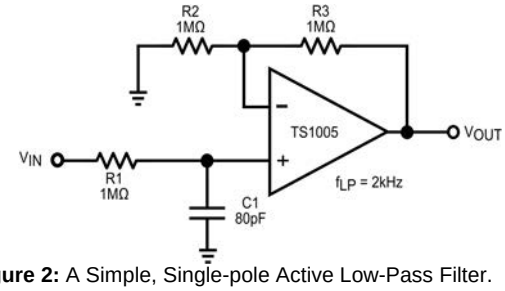

Figure 2: A Simple, Single-pole Active Low-Pass Filter.

often required. As shown in Figure 2, the simplest way to achieve this objective is to use an RC filter at the noninverting terminal of the TS1005. If additional attenuation is needed, a two-pole Sallen-Key filter can be used to provide the additional attenuation as shown in Figure 3.

For best results, the filter's cutoff frequency should be 8 to 10 times lower than the TS1005's crossover frequency. Additional operational amplifier phase margin shift can be avoided if the amplifier bandwidth-to-signal bandwidth ratio is greater than 8.

The design equations for the 2-pole Sallen-Key low-pass filter are given below with component values selected to set a 2kHz low-pass filter cutoff frequency:

R1 = R2 = R = 1MΩ
C1 = C2 = C = 80pF
Q = Filter Peaking Factor = 1
f–3dB = 1/(2 x π x RC) = 2kHz
R3 = R4/(2-1/Q); with Q = 1, R3 = R4.

A Single +1.5 V Supply, Two Op Amp Instrumentation Amplifier

The TS1005's ultra-low supply current and ultra-low voltage operation make it ideal for battery-powered applications such as the instrumentation amplifier shown in Figure 4.

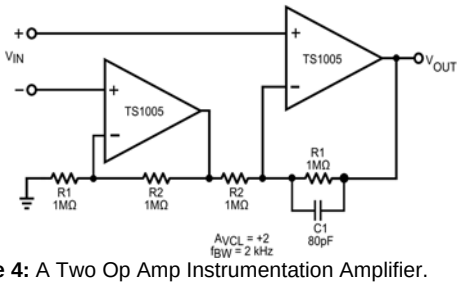

Figure 4: A Two Op Amp Instrumentation Amplifier.

The circuit utilizes the classic two op amp instrumentation amplifier topology with four resistors

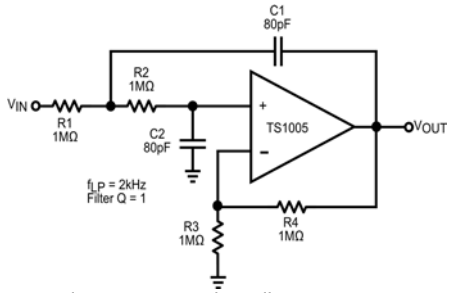

Figure 3: A Micropower 2-Pole Sallen-Key Low-Pass Filter.

to set the gain. The equation is simply that of a noninverting amplifier as shown in the figure.

The two resistors labeled R1 should be closely matched to each other as well as both resistors labeled R2 to ensure acceptable common-mode rejection performance.

Resistor networks ensure the closest matching as well as matched drifts for good temperature stability. Capacitor C1 is included to limit the bandwidth and, therefore, the noise in sensitive applications. The value of this capacitor should be adjusted depending on the desired closed-loop bandwidth of the instrumentation amplifier. The RC combination creates a pole at a frequency equal to 1/(2π×R1C1). If the AC-CMRR is critical, then a matched capacitor to C1 should be included across the second resistor labeled R1.

Because the TS1005 accepts rail-to-rail inputs, the input common mode range includes both ground and the positive supply of 1.5V. Furthermore, the rail-to-rail output range ensures the widest signal range possible and maximizes the dynamic range of the system. Also, with its low supply current of 1.3µA, this circuit consumes a quiescent current of only ~2.7µA, yet it still exhibits a 2-kHz bandwidth at a circuit gain of 2.

Driving Capacitive Loads

While the TS1005's internal gain-bandwidth product is 20kHz, it is capable of driving capacitive loads up to 50pF in voltage follower configurations without any additional components. In many applications, however, an operational amplifier is required to drive much larger capacitive loads. The amplifier's output impedance and a large capacitive load create additional phase lag that further reduces the amplifier's phase margin. If enough phase delay is introduced, the amplifier's phase margin is reduced. The effect is quite evident when the transient response is observed as there will appear noticeable peaking/ringing in the output transient response.

If the TS1005 is used in an application that requires driving larger capacitive loads, an isolation resistor between the output and the capacitive load should be used as illustrated in Figure 5.

Table 1 illustrates a range of R_{ISO} values as a function of the external C_{LOAD} on the output of the TS1005. The power supply voltage used on the TS1005 at which these resistor values were determined empirically was 1.8V. The oscilloscope capture shown in Figure 6 illustrates a typical transient response obtained with a C_{LOAD} = 100pF and an R_{ISO} = 120kΩ. Note that as C_{LOAD} is increased a smaller R_{ISO} is needed for optimal transient response.

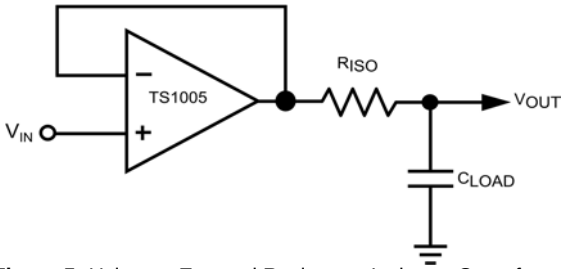

Figure 5: Using an External Resistor to Isolate a C_{LOAD} from the TS1005's Output

External Capacitive Load, C_{LOAD}	External Output Isolation Resistor, R_{ISO}
0-50pF	Not Required
100pF	120kΩ
500pF	50kΩ
1nF	33kΩ
5nF	18kΩ
10nF	13kΩ

In the event that an external R_{LOAD} in parallel with C_{LOAD} appears in the application, the use of an R_{ISO} results in gain accuracy loss because the external series R_{ISO} forms a voltage-divider with the external load resistor R_{LOAD}.

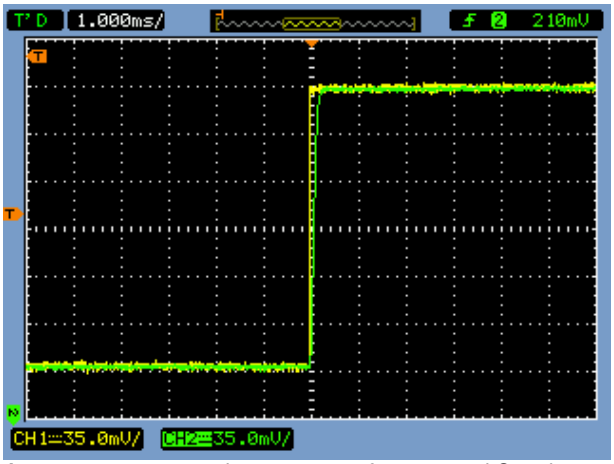

Figure 6: TS1003 Transient Response for R_{ISO} = 50kΩ and C_{LOAD} = 500pF.

Configuring the TS1005 as Microwatt Analog Comparator

Although optimized for use as an operational amplifier, the TS1005 can also be used as a rail-to-rail I/O comparator as illustrated in Figure 7.

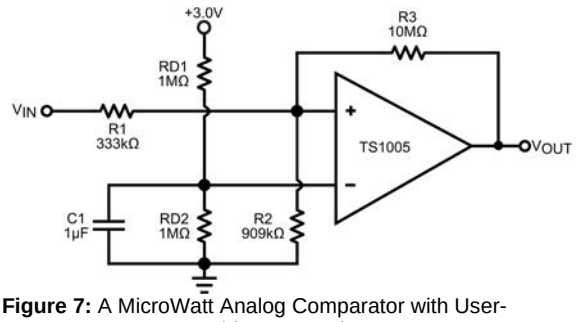

Figure 7: A MicroWatt Analog Comparator with User-Programmable Hysteresis.

External hysteresis can be employed to minimize the risk of output oscillation. The positive feedback circuit causes the input threshold to change when the output voltage changes state. The diagram in Figure 8 illustrates the TS1005's analog comparator

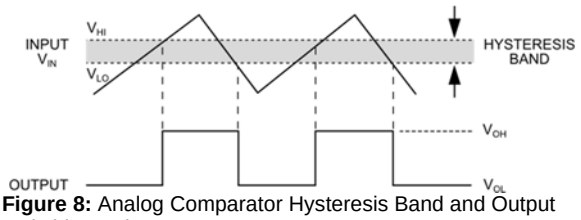

Figure 8: Analog Comparator Hysteresis Band and Output Switching Points.

hysteresis band and output transfer characteristic.

The design of an analog comparator using the TS1005 is straightforward. In this application, a 3.0V power supply (V_{DD}) was used and the resistor divider network formed by RD1 and RD2 generated a convenient reference voltage (V_{REF}) for the circuit at ½ the supply voltage, or 1.5V, while keeping the current drawn by this resistor divider low. Capacitor C1 is used to filter any extraneous noise that could couple into the TS1005's inverting input.

In this application, the desired hysteresis band was set to 100mV (V_{HYB}) with a desired high trip-point (V_{HI}) set at 2.1V and a desired low trip-point (V_{LO}) set at 2.0V.

Since the TS1005 is a low supply current amplifier (1.3µA, typical), it is desired that the design of an analog comparator using the TS1005 should also use as little current as practical. The first step in the design, therefore, was to set the feedback resistor R3:

R3 = 10MΩ

Calculating a value for R1 is given by the following expression:

$R1 = R3 \times (V_{HYB}/V_{DD})$

Substituting V_{HYB}=100mV, V_{DD}=3.0V, and R3=10MΩ into the equation above yields:

R1 = 333kΩ

The following expression was then used to calculate a value for R2:

$R2 = 1/[V_{HI}/(V_{REF} \times R1) – (1/R1) – (1/R3)]$

Substituting V_{HI} = 2.1V, V_{REF} = 1.5V, R1 = 333kΩ, and R3 = 10MΩ into the above expression yields:

R2 = 909kΩ

Printed Circuit Board Layout Considerations

Even though the TS1005 operates from a single 0.8V to 5.5V power supply and consumes very little supply current, it is always good engineering practice to bypass the power supplies with a 0.1µF ceramic capacitor placed in close proximity to the V_{DD} and V_{SS} (or GND) pins.

Good pcb layout techniques and analog ground plane management improve the performance of any analog circuit by decreasing the amount of stray capacitance that could be introduced at the op amp's inputs and outputs. Excess stray capacitance can easily couple noise into the input leads of the op amp and excess stray capacitance at the output will add to any external capacitive load. Therefore, PC board trace lengths and external component leads should be kept a short as practical to any of the TS1005's package pins. Second, it is also good engineering practice to route/remove any analog ground plane from the inputs and the output pins of the TS1005.

Package outline drawing

5-Pin SC70 Package Outline Drawing

(N.B., Drawings are not to scale)

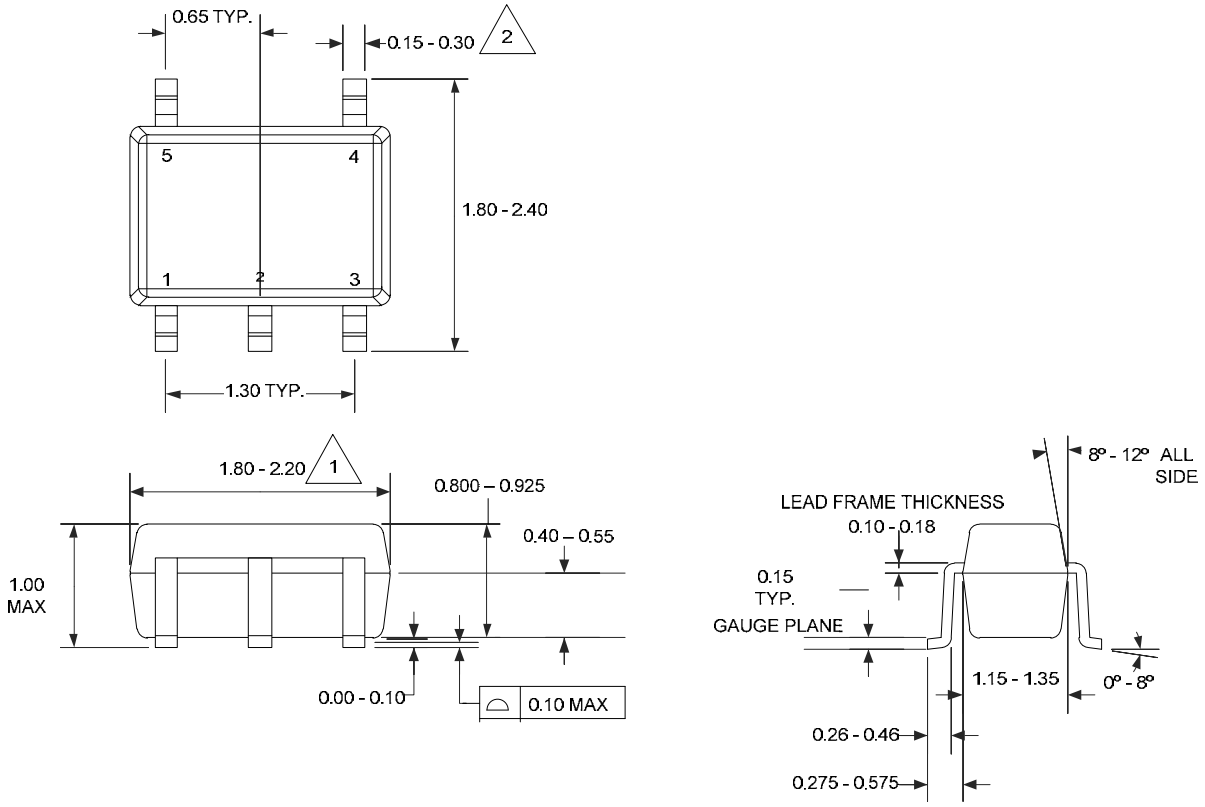

NOTES:

1. DOES NOT INCLUDE MOLD FLASH, PROTRUSIONS OR GATE BURRS.
2. DOES NOT INCLUDE INTER-LEAD FLASH OR PROTRUSIONS.
3. DIE IS FACING UP FOR MOLDING. DIE IS FACING DOWN FOR TRIM/FORM.
4. ALL SPECIFICATION COMPLY TO JEDEC SPEC MO-203 AA
5. CONTROLLING DIMENSIONS IN MILIMITERS.
6. ALL SPECIFICATIONS REFER TO JEDEC MO-203 AA
7. LEAD SPAN/STAND OFF HEIGHT/COPLANARITY ARE CONSIDERED AS SPECIAL CHARACTERISTIC

PACKAGE OUTLINE DRAWING

5-Pin SOT23 Package Outline Drawing

(N.B., Drawings are not to scale)

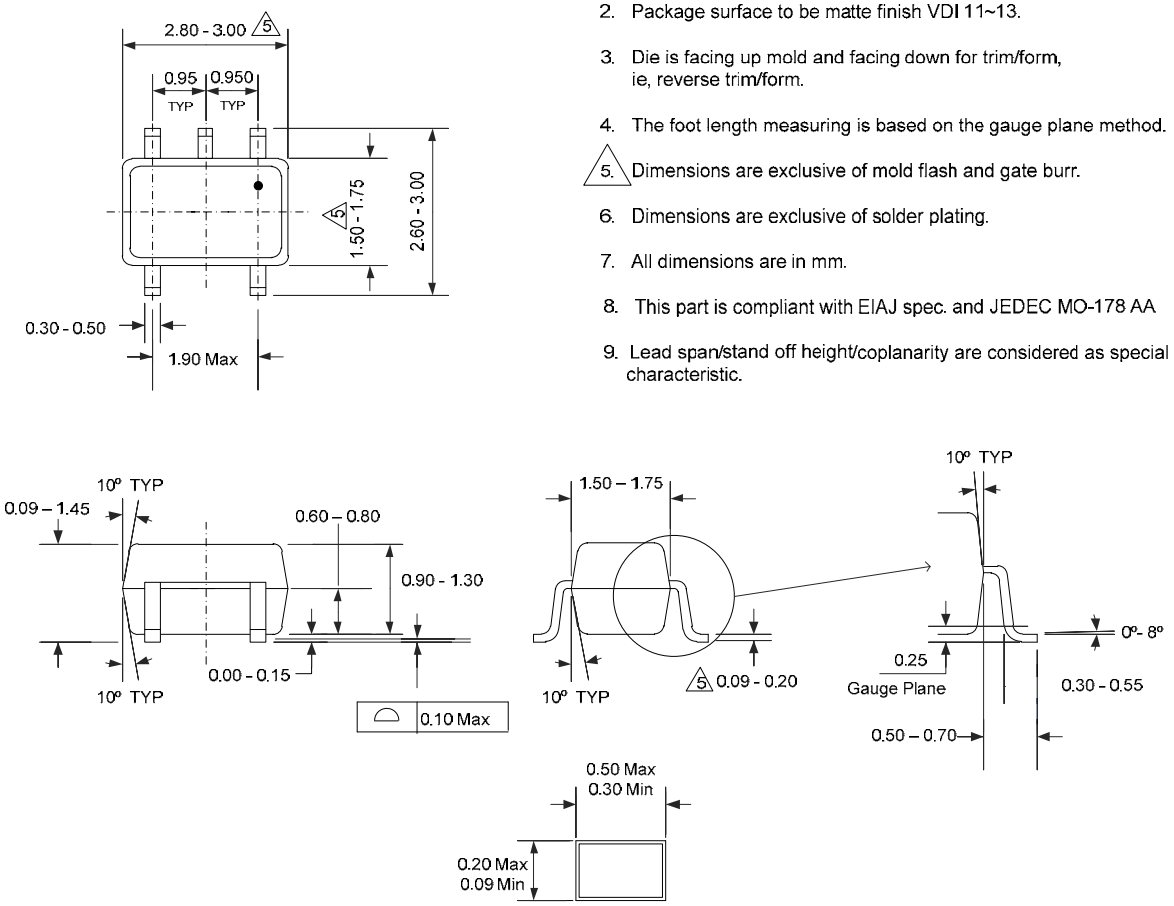

NOTES:

1. Dimensions and tolerances are as per ANSI Y14.5M, 1982.
2. Package surface to be matte finish VDI 11~13.
3. Die is facing up mold and facing down for trim/form, ie, reverse trim/form.
4. The foot length measuring is based on the gauge plane method.
5. Dimensions are exclusive of mold flash and gate burr.
6. Dimensions are exclusive of solder plating.
7. All dimensions are in mm.
8. This part is compliant with EIAJ spec. and JEDEC MO-178 AA
9. Lead span/stand off height/coplanarity are considered as special characteristic.

Patent Notice

Silicon Labs invests in research and development to help our customers differentiate in the market with innovative low-power, small size, analog-intensive mixed-signal solutions. Silicon Labs' extensive patent portfolio is a testament to our unique approach and world-class engineering team.

The information in this document is believed to be accurate in all respects at the time of publication but is subject to change without notice. Silicon Laboratories assumes no responsibility for errors and omissions, and disclaims responsibility for any consequences resulting from the use of information included herein. Additionally, Silicon Laboratories assumes no responsibility for the functioning of undescribed features or parameters. Silicon Laboratories reserves the right to make changes without further notice. Silicon Laboratories makes no warranty, representation or guarantee regarding the suitability of its products for any particular purpose, nor does Silicon Laboratories assume any liability arising out of the application or use of any product or circuit, and specifically disclaims any and all liability, including without limitation consequential or incidental damages. Silicon Laboratories products are not designed, intended, or authorized for use in applications intended to support or sustain life, or for any other application in which the failure of the Silicon Laboratories product could create a situation where personal injury or death may occur. Should Buyer purchase or use Silicon Laboratories products for any such unintended or unauthorized application, Buyer shall indemnify and hold Silicon Laboratories harmless against all claims and damages.

Silicon Laboratories and Silicon Labs are trademarks of Silicon Laboratories Inc.
Other products or brandnames mentioned herein are trademarks or registered trademarks of their respective holders.

Silicon Laboratories, Inc.
400 West Cesar Chavez, Austin, TX 78701
+1 (512) 416-8500 ▪ www.silabs.com

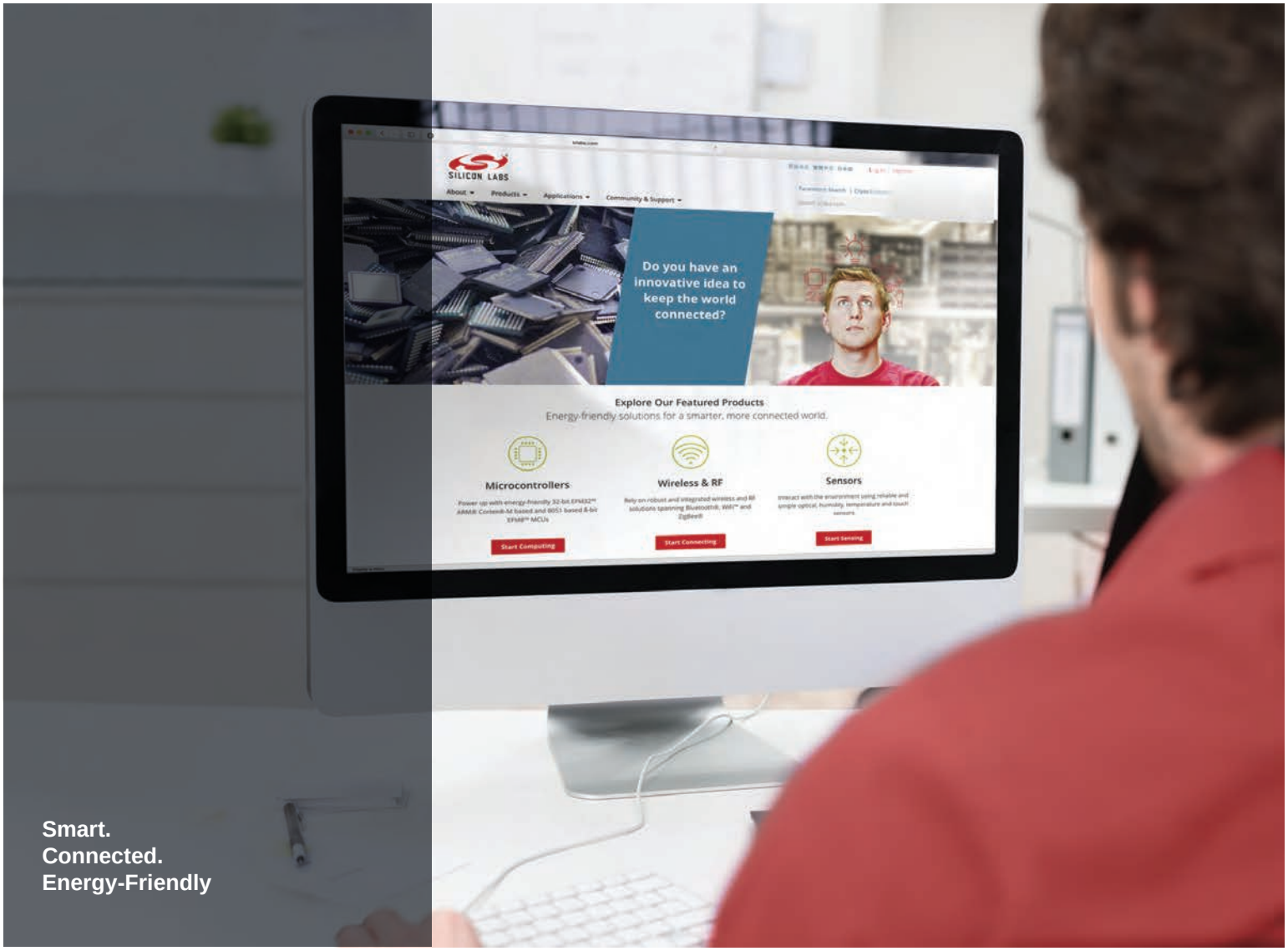

Products
www.silabs.com/products

Quality
www.silabs.com/quality

Support and Community
community.silabs.com

Disclaimer
Silicon Laboratories intends to provide customers with the latest, accurate, and in-depth documentation of all peripherals and modules available for system and software implementers using or intending to use the Silicon Laboratories products. Characterization data, available modules and peripherals, memory sizes and memory addresses refer to each specific device, and "Typical" parameters provided can and do vary in different applications. Application examples described herein are for illustrative purposes only. Silicon Laboratories reserves the right to make changes without further notice and limitation to product information, specifications, and descriptions herein, and does not give warranties as to the accuracy or completeness of the included information. Silicon Laboratories shall have no liability for the consequences of use of the information supplied herein. This document does not imply or express copyright licenses granted hereunder to design or fabricate any integrated circuits. The products must not be used within any Life Support System without the specific written consent of Silicon Laboratories. A "Life Support System" is any product or system intended to support or sustain life and/or health, which, if it fails, can be reasonably expected to result in significant personal injury or death. Silicon Laboratories products are generally not intended for military applications. Silicon Laboratories products shall under no circumstances be used in weapons of mass destruction including (but not limited to) nuclear, biological or chemical weapons, or missiles capable of delivering such weapons.

Trademark Information
Silicon Laboratories Inc., Silicon Laboratories, Silicon Labs, SiLabs and the Silicon Labs logo, CMEMS®, EFM, EFM32, EFR, Energy Micro, Energy Micro logo and combinations thereof, "the world's most energy friendly microcontrollers", Ember®, EZLink®, EZMac®, EZRadio®, EZRadioPRO®, DSPLL®, ISOmodem ®, Precision32®, ProSLIC®, SiPHY®, USBXpress® and others are trademarks or registered trademarks of Silicon Laboratories Inc. ARM, CORTEX, Cortex-M3 and THUMB are trademarks or registered trademarks of ARM Holdings. Keil is a registered trademark of ARM Limited. All other products or brand names mentioned herein are trademarks of their respective holders.

SILICON LABS

Silicon Laboratories Inc.
400 West Cesar Chavez
Austin, TX 78701
USA

http://www.silabs.com